CH334/335 Datasheet

V2.8

https://wch-ic.com

Overview

CH334 and CH335 are USB2.0 protocol compliant 4-port USB HUB controller chips, supporting USB2.0 high-speed and full-speed for upstream ports, and USB2.0 high-speed 480Mbps, full-speed 12Mbps and low-speed 1.5Mbps for downstream ports, supporting not only low-cost STT mode (single TT schedules 4 downstream ports in time share), but also supports high performance MTT mode (4 TTs each corresponding to 1 port, concurrent processing).

Industrial-grade design with streamlined peripherals for use in computer and industrial control machine motherboards, peripherals, embedded systems, etc.

Features

- 4-port USB HUB, providing 4 USB 2.0 downstream ports, backward compatible with USB 1.1 protocol specification
- Support each port independent power control or GANG overall linkage power control
- Support independent overcurrent detection of each port or overall overcurrent detection of GANG, support 5V tolerant overcurrent signal input
- Support high performance MTT mode, providing independent TT for each port to achieve full bandwidth concurrent transmission, with 4 times the total bandwidth of STT
- Support port status LED indicators
- Configurable via external EEPROM to support composite devices, non-removable devices, custom VIDs, PIDs and port configurations
- Built-in information memory, for industry-specific needs can be customized in bulk manufacturer or product information and configuration, no need EEPROM
- Self-developed dedicated USB PHY, LPM low-power consumption technology, significantly reduced compared to the first generation of HUB chips, support self-powered or bus-powered
- Self-powered or bus-powered mode configurable via I/O pins or external EEPROM
- Provides crystal oscillator with built-in capacitor, supports external 12MHz input, and built-in PLL provides 480MHz clock for USB PHY
- Built-in professional high-precision clock, you can choose to remove the external 12MHz crystal to save costs, reduce size and reduce EMI
- Built-in 1.5KΩ pull-up resistor on the upstream port, built-in pull-down resistor on the downstream port required for USB Host, streamlined periphery
- Built-in LDO linear buck regulator converts USB bus supply voltage to 3.3V operating power for the chip
- CH335 supports MCU control upstream port and 1# downstream port exchange
- USB pins have 6KV enhanced ESD performance, Class 3A
- Industrial grade temperature range: -40~85°C
- QFN28, QFN24, QFN16, QSOP28 and other packages available

Chapter 1 Pins

1.1 Pinouts

Figure 1-1 Pinouts

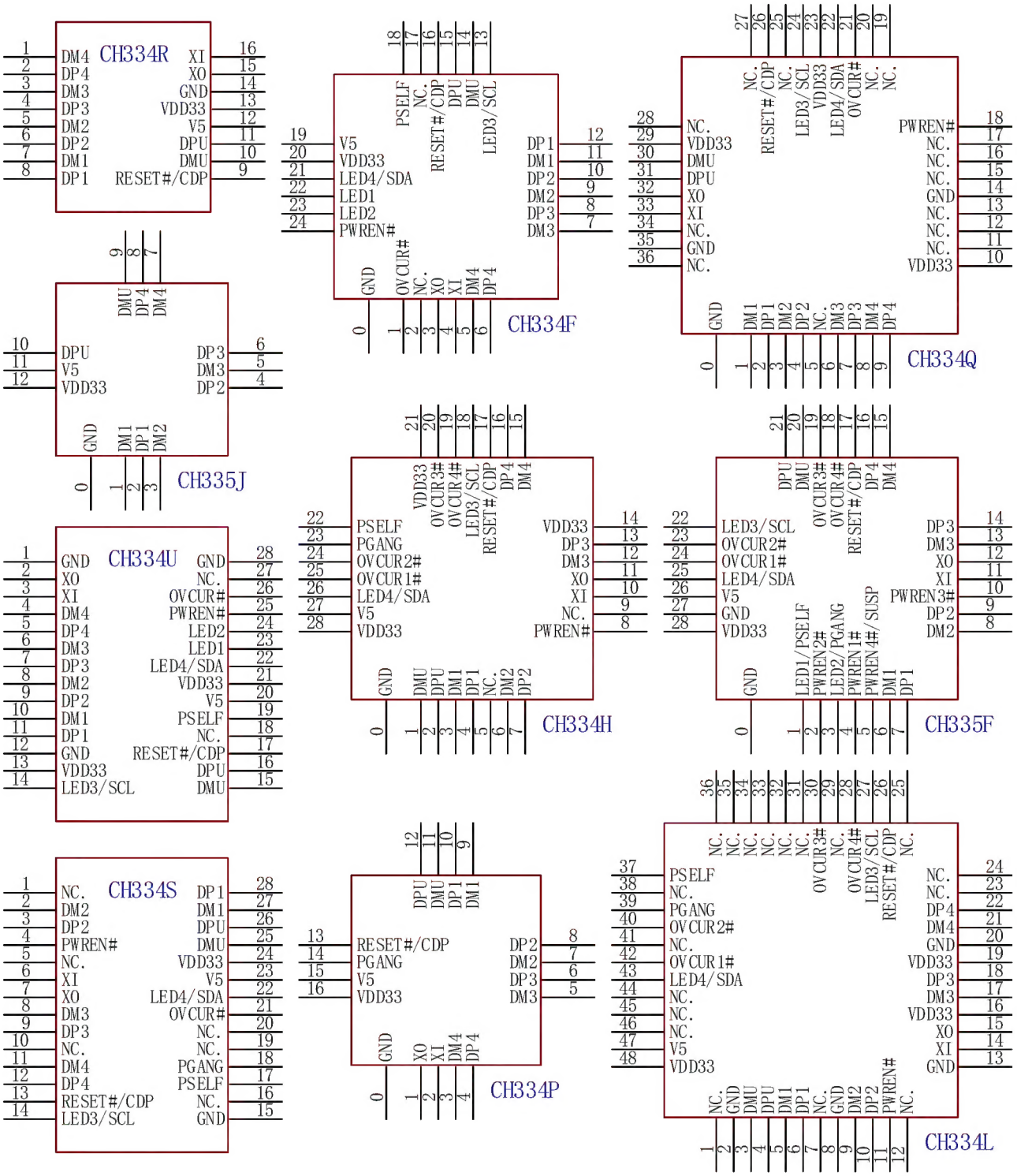

Note: Pin 0# is the EPAD of QFN package.

1.2 Model Comparison

Table 1-1 Function comparison of the same cluster model

Model / Function	CH335P	CH334P	CH334R	CH334U CH334F	CH334S CH334Q CH334X(1)	CH334H CH334L	CH335F
TT mode	MTT	MTT	MTT	MTT	MTT	MTT	MTT
Overcurrent detection	×	×	×	GANG mode	GANG mode	Independent / GANG	Independent / GANG
Power control	×	×	×	GANG mode	GANG mode	GANG mode	Independent / GANG
LED indicator	×	1-LED	×	5-LED	1-LED	1-LED	5-LED / 9-LED
I/O pin configuration power supply mode	×	×	×	√	√	√	√
External EEPROM provide configuration information	×	×	×	√	√	√	√
Custom configuration information	√	√	√	√	√	√	√
Crystal-free applications	Optional	Optional	Optional	Optional	Optional	Optional	Optional
Exchange upstream port	×	×	×	×	×	×	Optional

Note 1: CH334X is an upgraded version of CH334Q. It supports dual independent mode but does not support GANG mode, and uses a 24MHz crystal instead.

1.3 Package

Table 1-2 Package Description

Package Form	Body Size		Pin Pitch		Package Description	Order Model
QSOP16	3.9mm	150mil	0.635mm	25mil	Quarter-sized Outline Package	CH334R
QSOP28	3.9mm	150mil	0.635mm	25mil	Quarter-sized Outline Package	CH334U
SSOP28	5.3mm	209mil	0.65mm	25mil	Shrink Small-Outline Package	CH334S
QFN16C_2×2	2*2mm		0.4mm	15.7mil	WCH Quad Flat No-Lead Package	CH335P
QFN16_3×3	3*3mm		0.5mm	19.7mil	Quad Flat No-Lead Package	CH334P
QFN24_4×4	4*4mm		0.5mm	19.7mil	Quad Flat No-Lead Package	CH334F
QFN28_4×4	4*4mm		0.4mm	15.7mil	Quad Flat No-Lead Package	CH335F
QFN28_5×5	5*5mm		0.5mm	19.7mil	Quad Flat No-Lead Package	CH334H
QFN36_6×6	6*6mm		0.5mm	19.7mil	Quad Flat No-Lead Package	CH334X
LQFP48	7*7mm		0.5mm	19.7mil	Low Profile Quad Flat Pack	CH334L

Note: CH335 and CH334P are preferred due to their small size; CH335 has a full pin count.

Other package types focus on PCB compatibility; CH334S/H/X/Q/L are not recommended for new designs; CH334L is available only for lot orders.